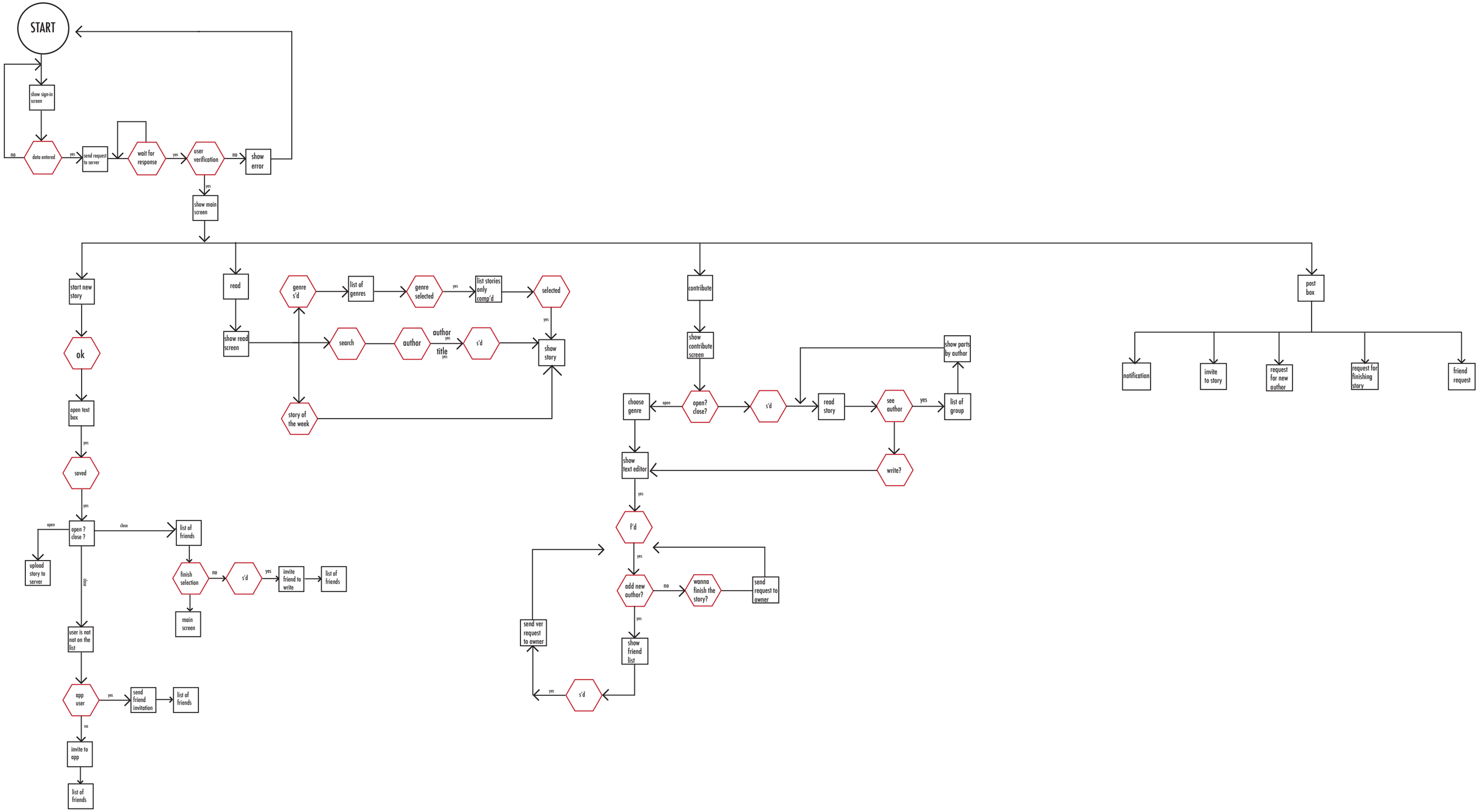
START
show sign-in screen
data entered
no
yes
send request to server
wait for response
yes
user verification
no
show error
yes
show main screen
start new story
ok
open text box
yes
saved
yes
open ? close ?
open
close
upload story to server
list of friends
finish selection
no
s'd
yes
invite friend to write
list of friends
main screen
user is not not on the list
app user
yes
send friend invitation
list of friends
no
invite to app
list of friends
read
show read screen
genre s'd
list of genres
genre selected
yes
list stories only comp'd
selected
yes
show story
search
author
author
yes
title
yes
s'd
story of the week
contribute
show contribute screen
open? close?
open
choose genre
show text editor
yes
f'd
yes
add new author?
no
wanna finish the story?
send request to owner
yes
show friend list
yes
s'd
send ver request to owner
s'd
read story
see author
yes
list of group
show parts by author
write?
post box
notification
invite to story
request for new author
request for finishing story
friend request